KOHLER®

Mach Tripoint Touchless Toilet Flush

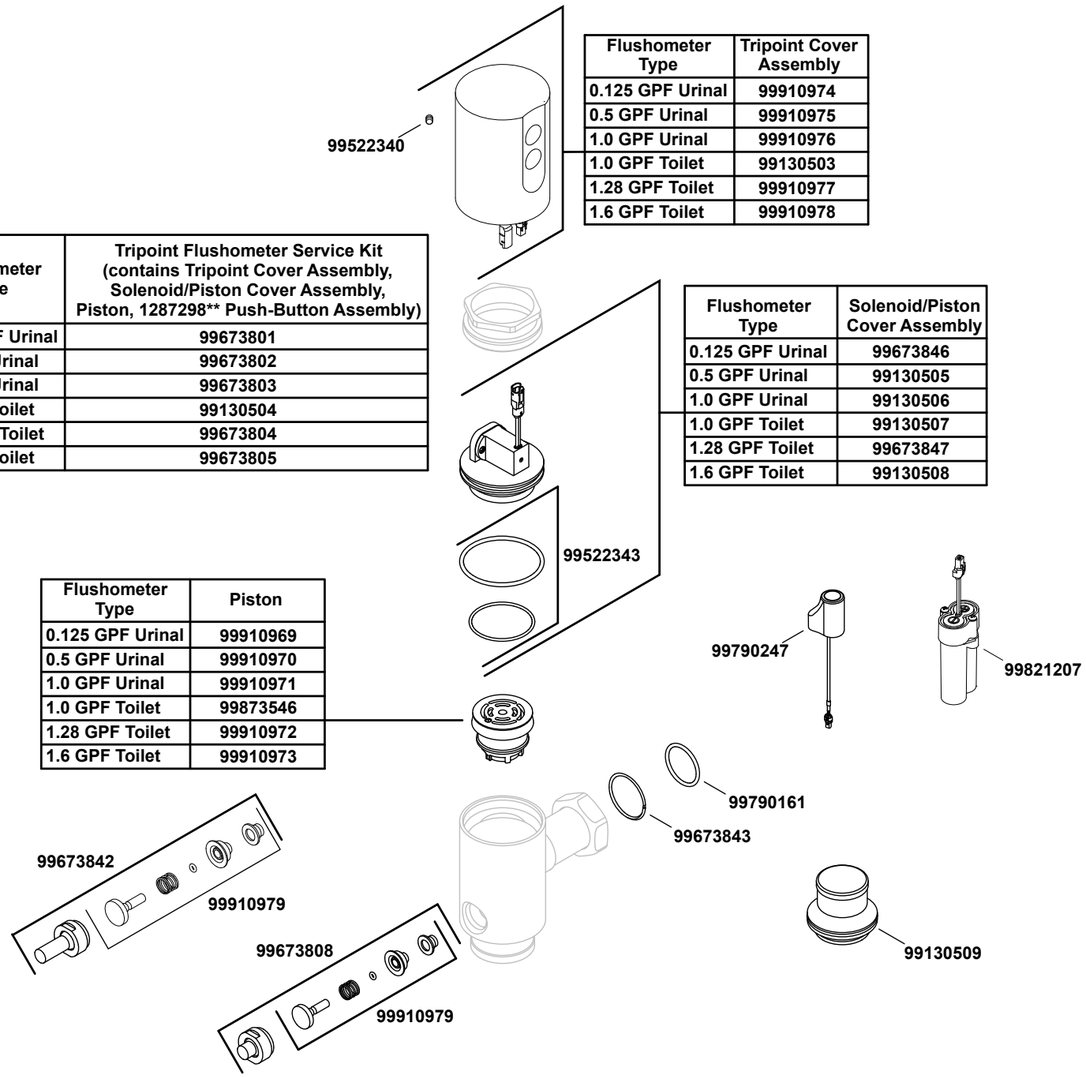

Flushometer Type	Tripoint Cover Assembly
0.125 GPF Urinal	99910974
0.5 GPF Urinal	99910975
1.0 GPF Urinal	99910976
1.0 GPF Toilet	99130503
1.28 GPF Toilet	99910977
1.6 GPF Toilet	99910978

Flushometer Type	Tripoint Flushometer Service Kit (contains Tripoint Cover Assembly, Solenoid/Piston Cover Assembly, Piston, 1287298** Push-Button Assembly)
0.125 GPF Urinal	99673801
0.5 GPF Urinal	99673802
1.0 GPF Urinal	99673803
1.0 GPF Toilet	99130504
1.28 GPF Toilet	99673804
1.6 GPF Toilet	99673805

Flushometer Type	Solenoid/Piston Cover Assembly
0.125 GPF Urinal	99673846
0.5 GPF Urinal	99130505
1.0 GPF Urinal	99130506
1.0 GPF Toilet	99130507
1.28 GPF Toilet	99673847
1.6 GPF Toilet	99130508

Flushometer Type	Piston
0.125 GPF Urinal	99910969
0.5 GPF Urinal	99910970
1.0 GPF Urinal	99910971
1.0 GPF Toilet	99873546
1.28 GPF Toilet	99910972
1.6 GPF Toilet	99910973

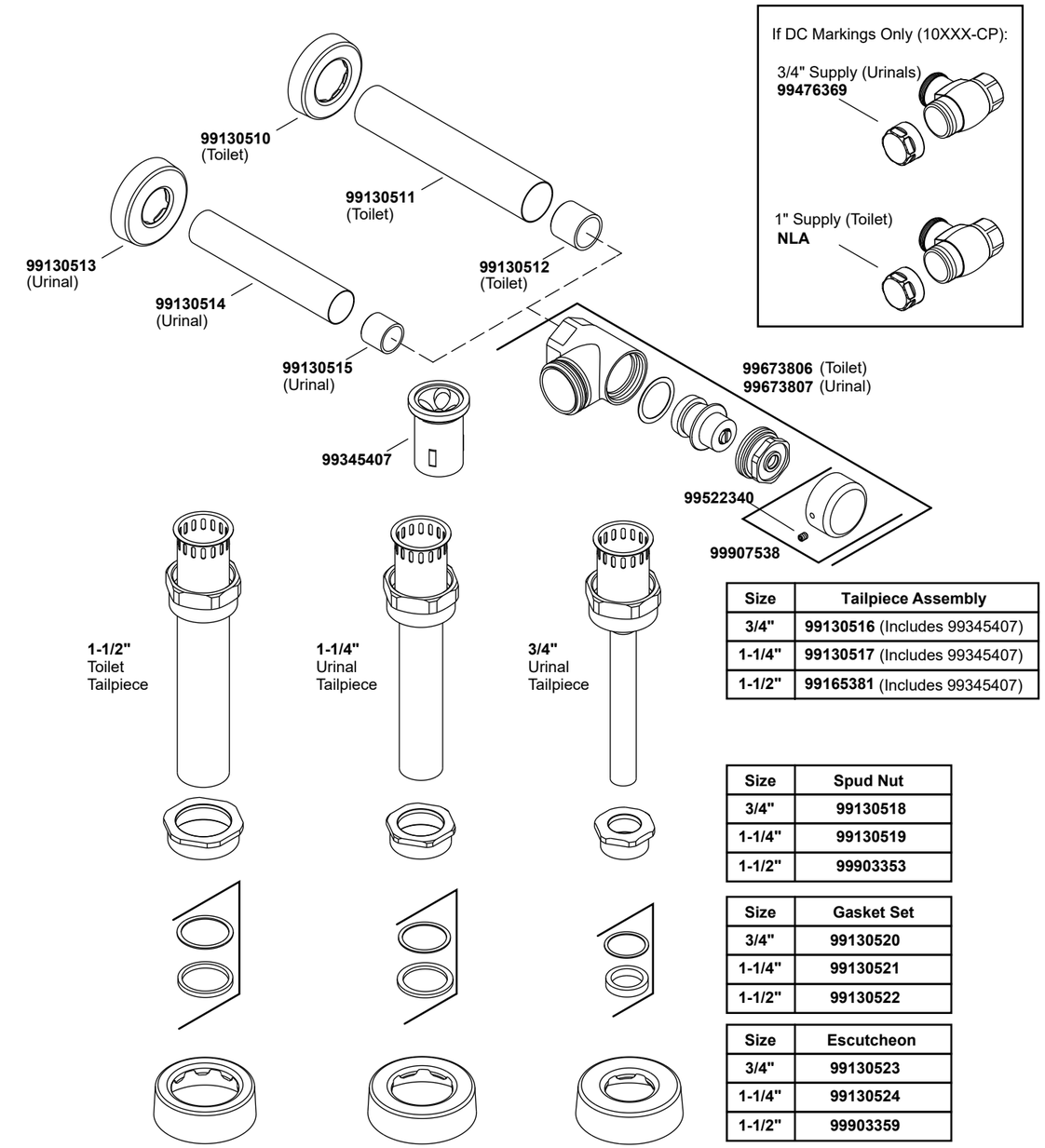

Size	Tailpiece Assembly
3/4"	99130516 (Includes 99345407)
1-1/4"	99130517 (Includes 99345407)
1-1/2"	99165381 (Includes 99345407)

Size	Spud Nut
3/4"	99130518
1-1/4"	99130519
1-1/2"	99903353

Size	Gasket Set
3/4"	99130520
1-1/4"	99130521
1-1/2"	99130522

Size	Escutcheon
3/4"	99130523
1-1/4"	99130524
1-1/2"	99903359

©2020 Kohler Co.